1： 10

Fashion Week
TOPO1

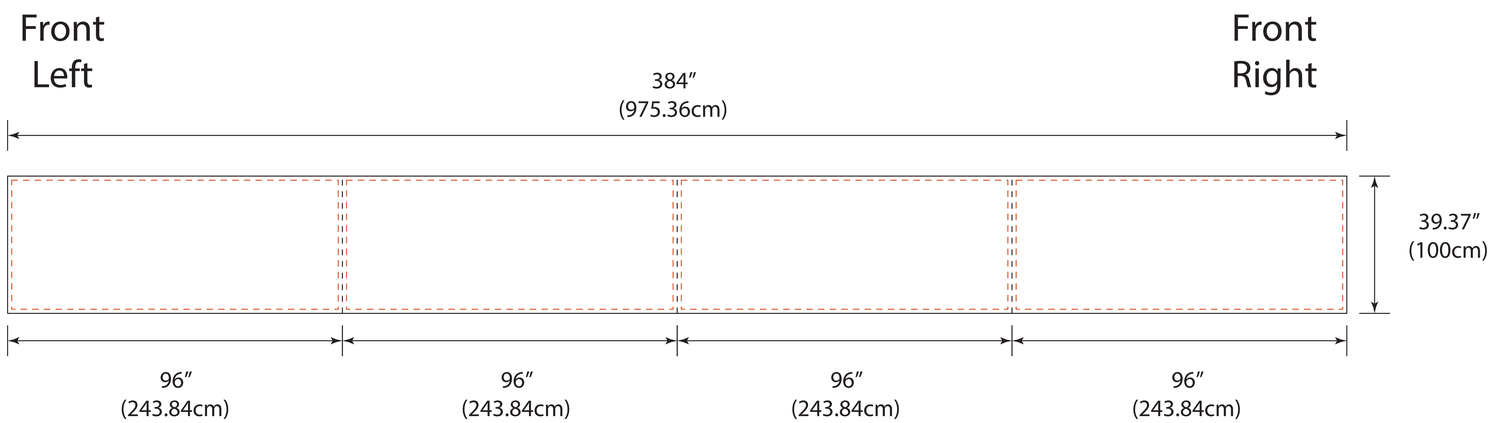
Front Left
Front Right
384″
(975.36cm)
39.37″
(100cm)
96″
(243.84cm)
96″
(243.84cm)
96″
(243.84cm)
96″
(243.84cm)

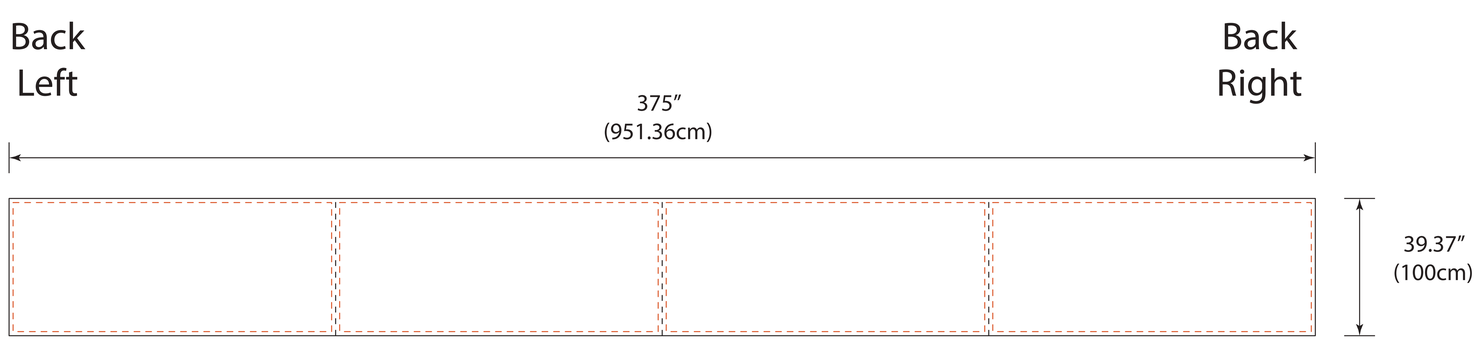
Back Left
Back Right
375″
(951.36cm)
39.37″
(100cm)

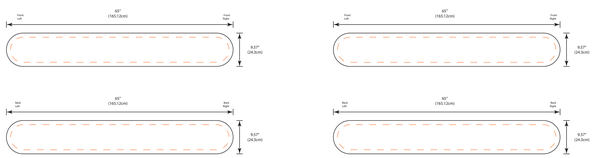



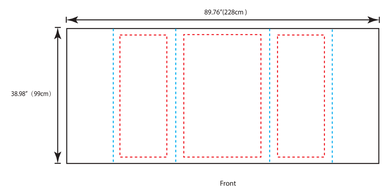
89.76″(228cm )
38.98″（99cm）
Front

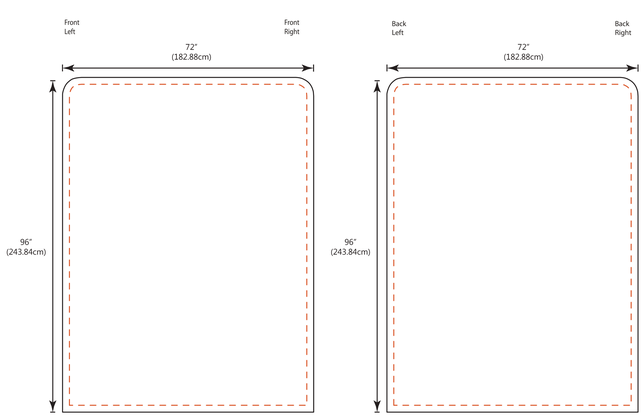
Front Left
Front Right
72″
(182.88cm)
96″
(243.84cm)
Back Left
Back Right
72″
(182.88cm)
96″
(243.84cm)

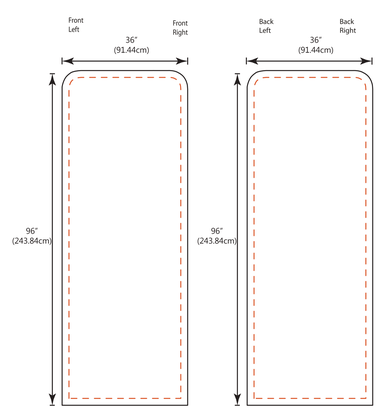
Front Left
Front Right
36″
(91.44cm)
96″
(243.84cm)
Back Left
Back Right
36″
(91.44cm)
96″
(243.84cm)

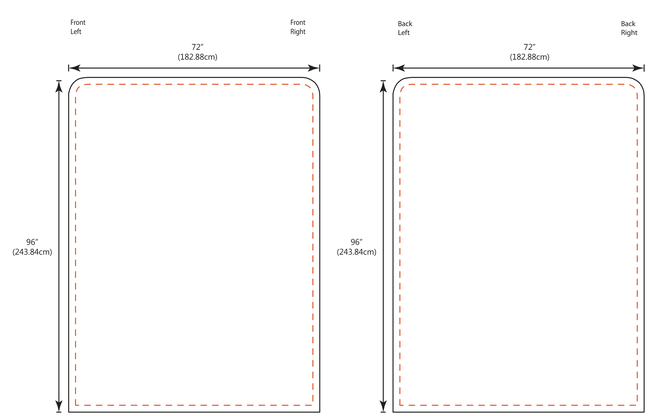
Front Left
Front Right
72″
(182.88cm)
96″
(243.84cm)
Back Left
Back Right
72″
(182.88cm)
96″
(243.84cm)

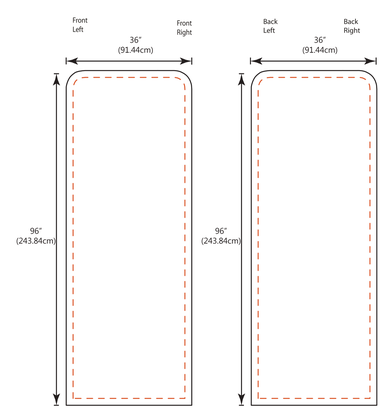
Front Left
Front Right
36″
(91.44cm)
96″
(243.84cm)
Back Left
Back Right
36″
(91.44cm)
96″
(243.84cm)