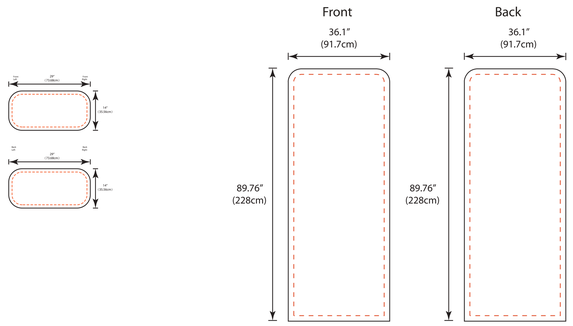

1:10

8FT*7.5FT

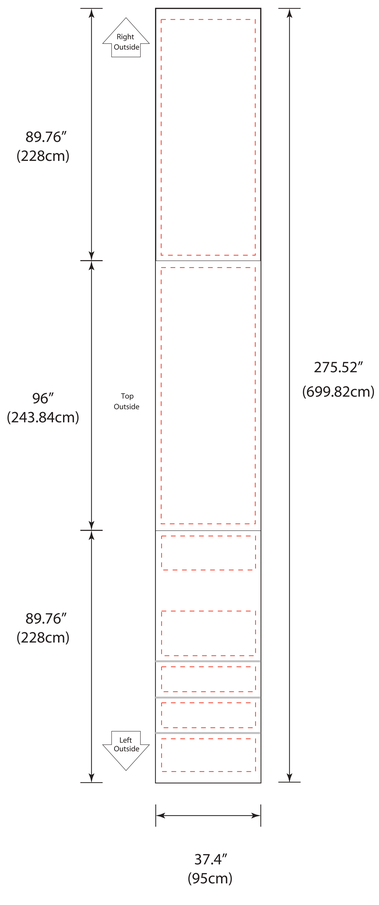

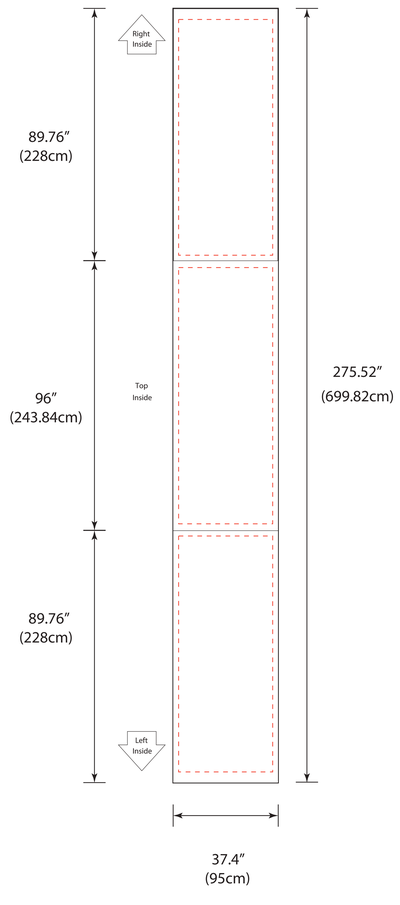
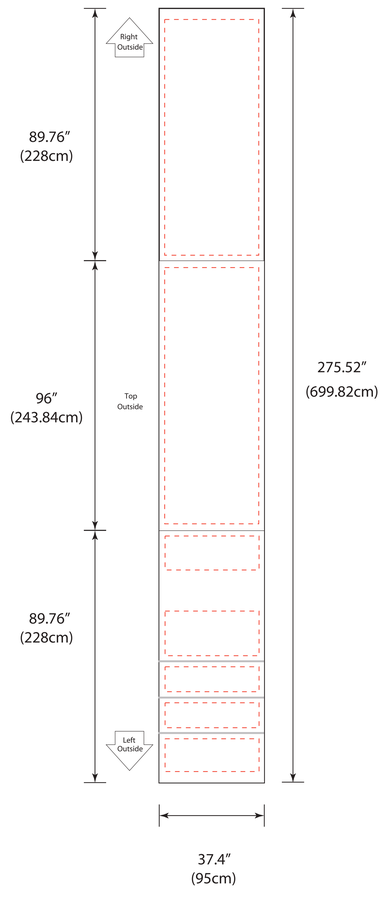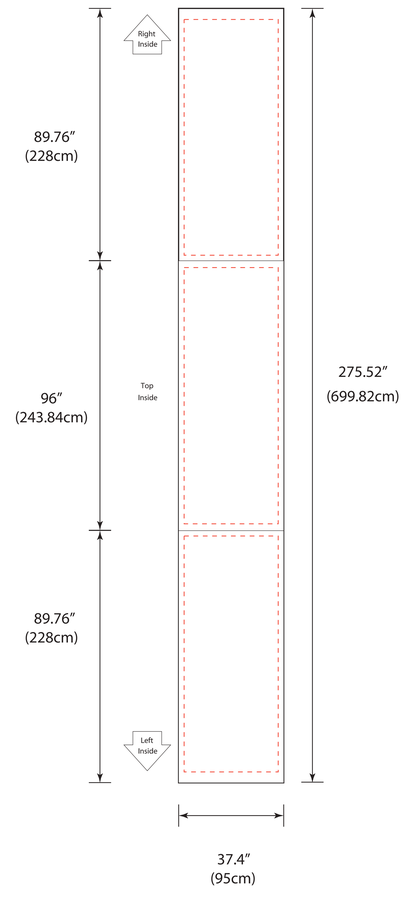
8FT*7.5FT