1: 2

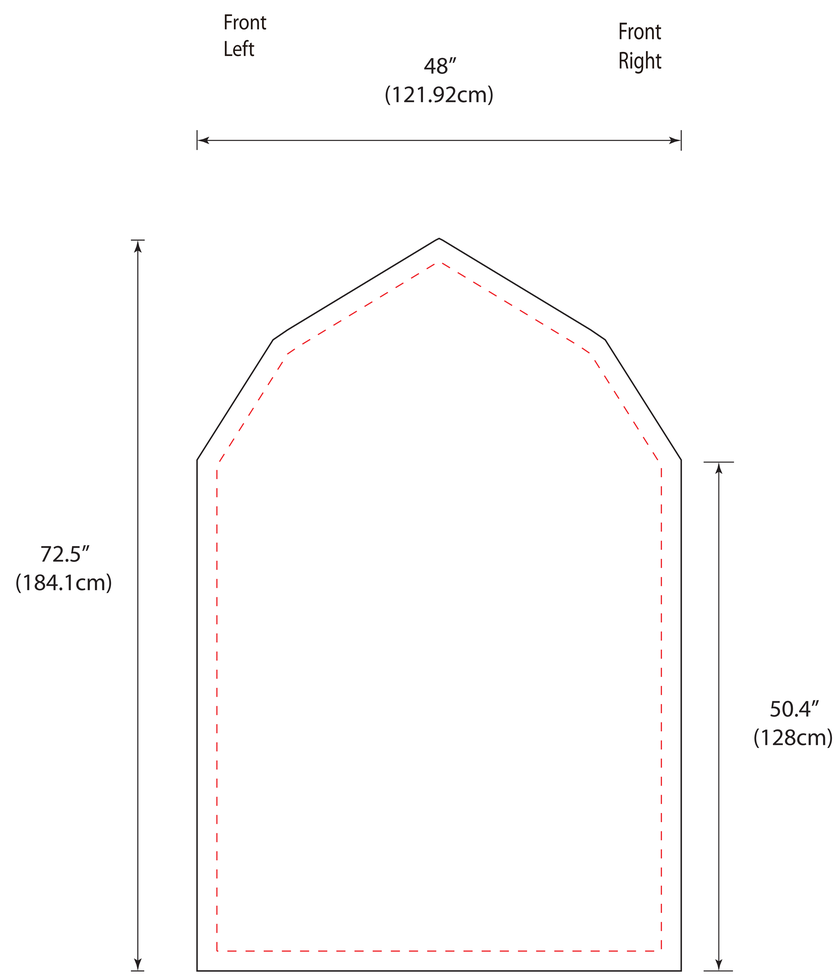
Front
Left
Front
Right
48″
(121.92cm)
72.5″
(184.1cm)
50.4″
(128cm)

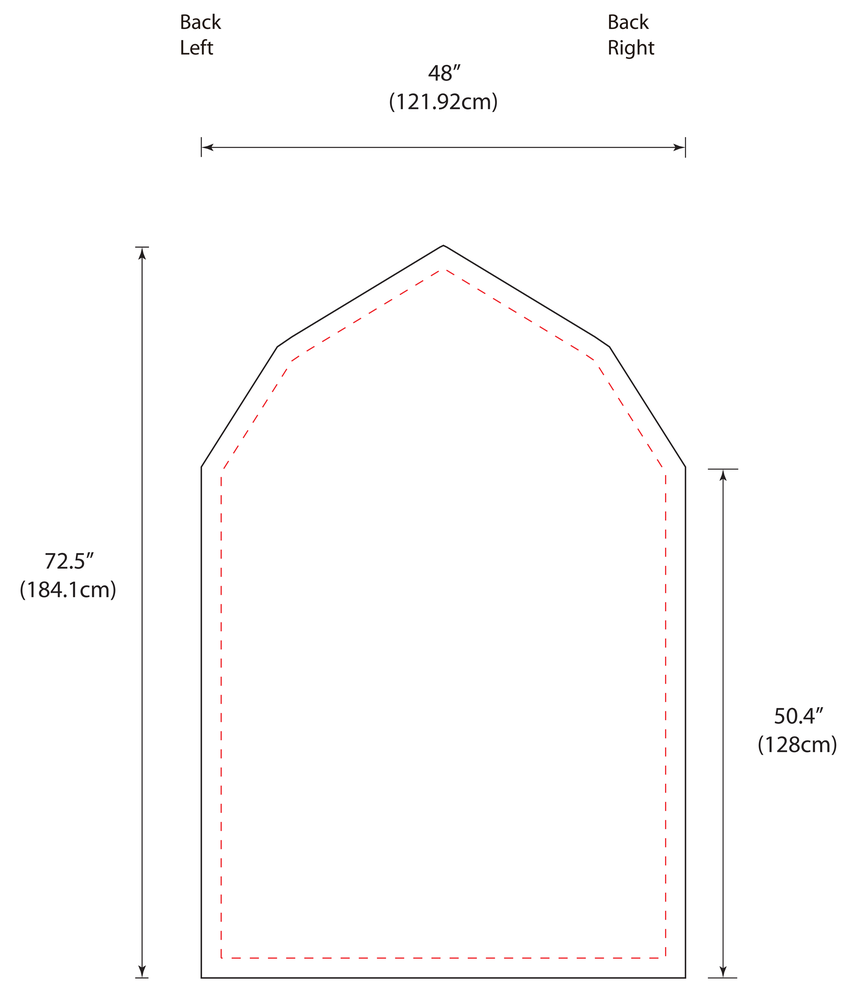
Back
Left
Back
Right
48″
(121.92cm)
72.5″
(184.1cm)
50.4″
(128cm)