1 : 2

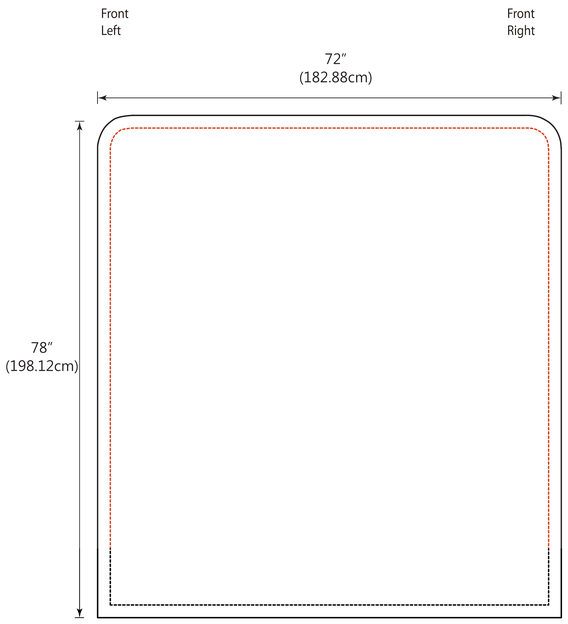
Front Left
Front Right
72″
(182.88cm)
78″
(198.12cm)

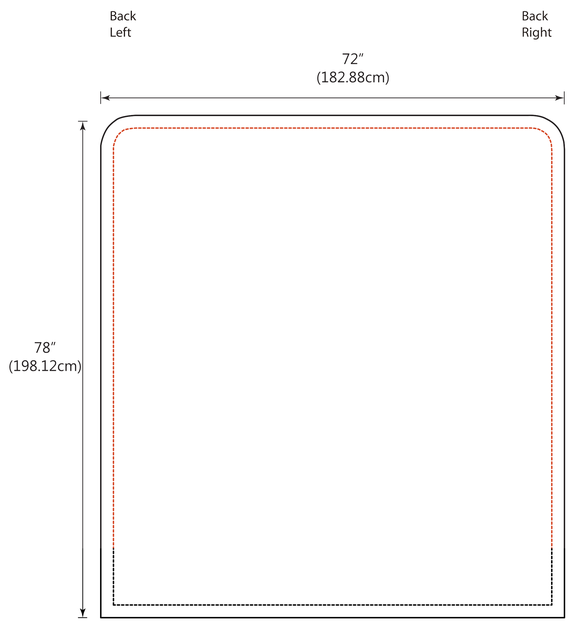
Back Left
Back Right
72″
(182.88cm)
78″
(198.12cm)

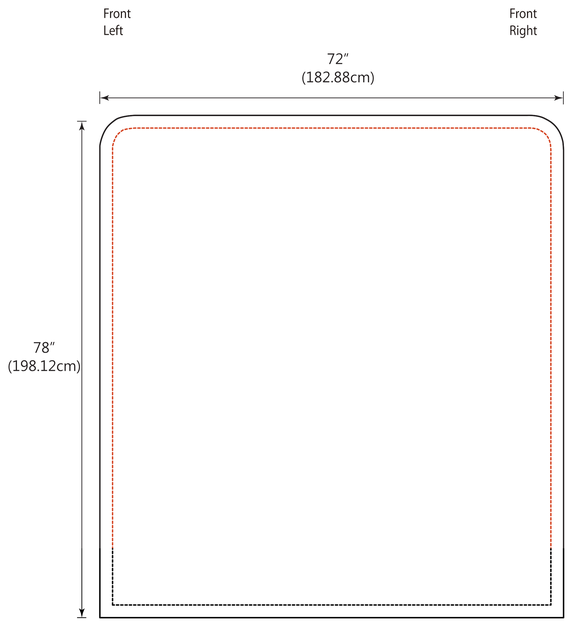
Front Left
Front Right
72″
(182.88cm)
78″
(198.12cm)

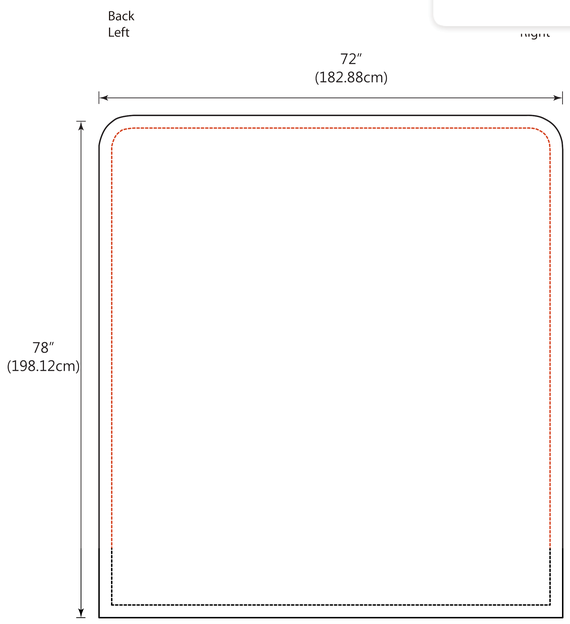
Back Left
72″
(182.88cm)
78″
(198.12cm)

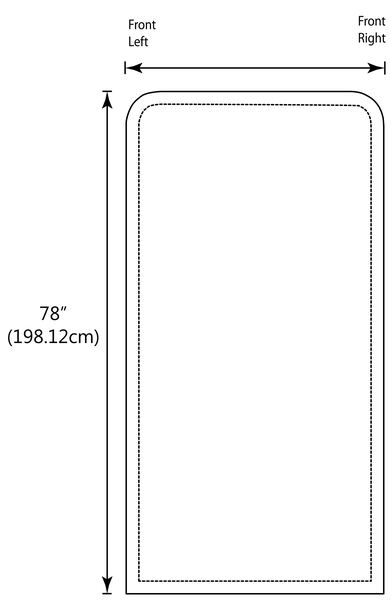
Front Left
Front Right
78″
(198.12cm)

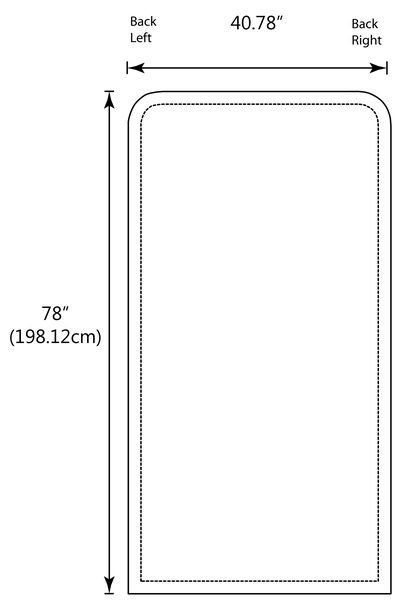
Back Left
40.78″
Back Right
78″
(198.12cm)

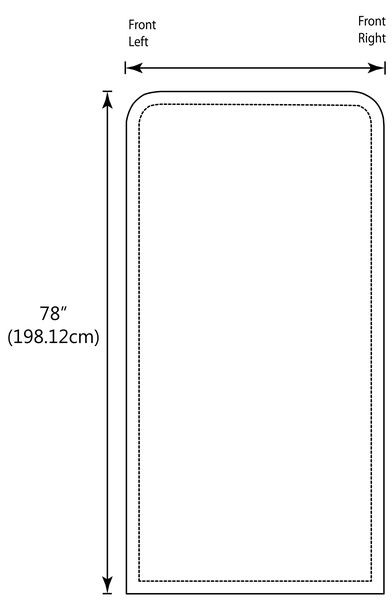
Front Left
Front Right
78″
(198.12cm)

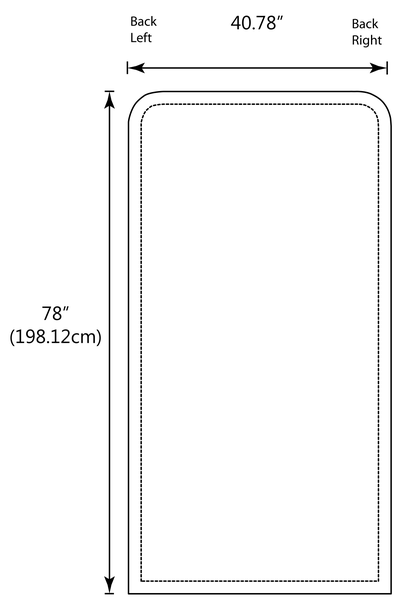
Back Left
40.78″
Back Right
78″
(198.12cm)

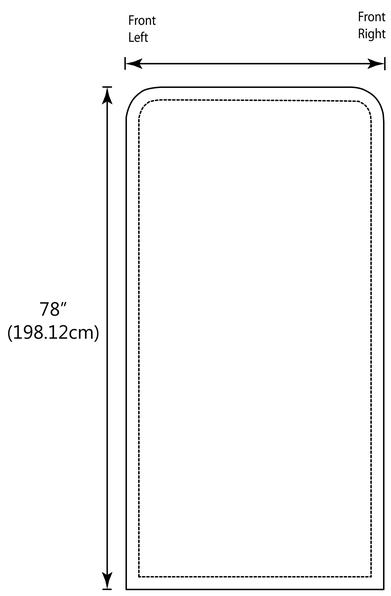
Front Left
Front Right
78″
(198.12cm)

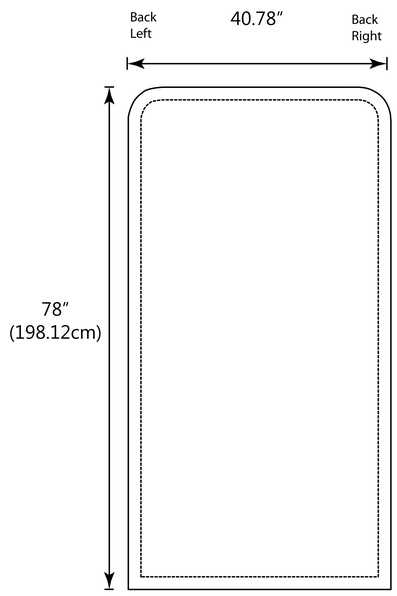
Back Left
40.78″
Back Right
78″
(198.12cm)

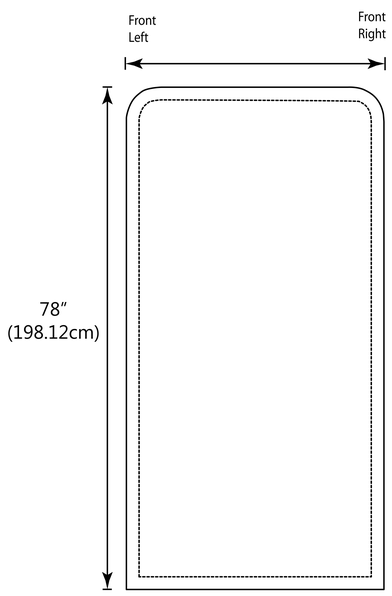
Front Left
Front Right
78″
(198.12cm)

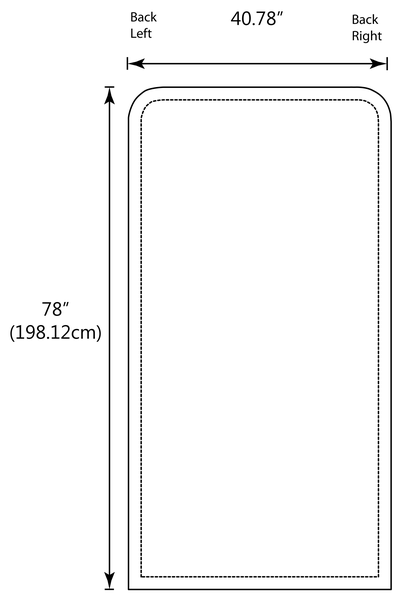
Back Left
40.78″
Back Right
78″
(198.12cm)