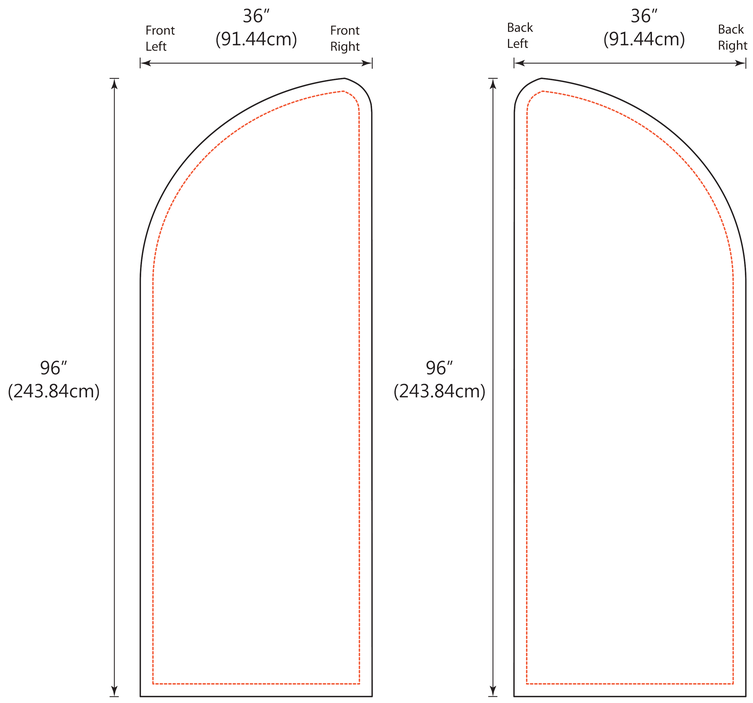
Front Left
36″ (91.44cm)
Front Right
96″ (243.84cm)
Back Left
36″ (91.44cm)
Back Right
96″ (243.84cm)

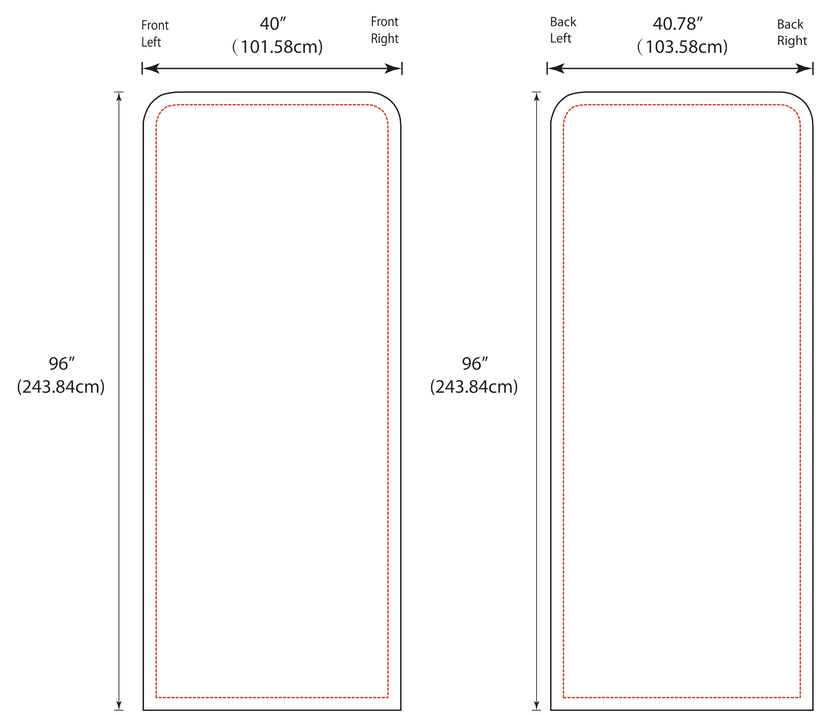
Front Left
40″ (101.58cm)
Front Right
96″ (243.84cm)
Back Left
40.78″ (103.58cm)
Back Right
96″ (243.84cm)

1 :

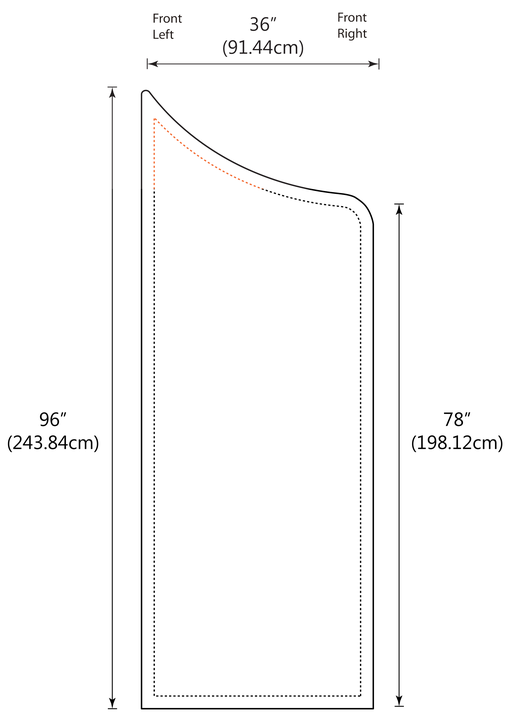
Front Left
36″ (91.44cm)
Front Right
96″ (243.84cm)
78″ (198.12cm)

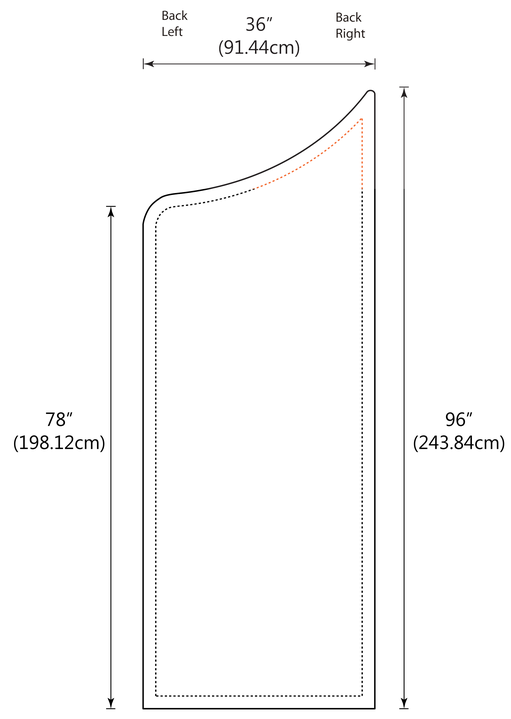
Back Left
36″ (91.44cm)
Back Right
78″ (198.12cm)
96″ (243.84cm)

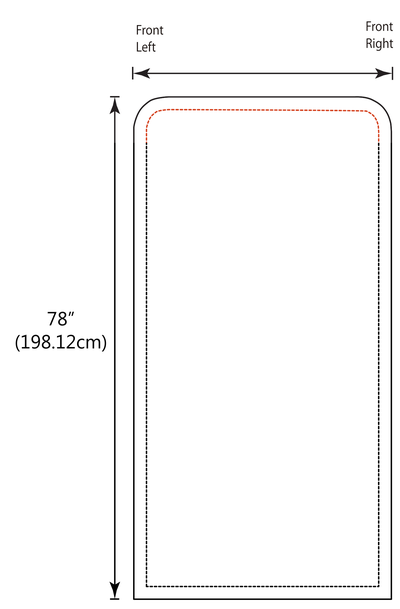
Front Left
Front Right
78″ (198.12cm)

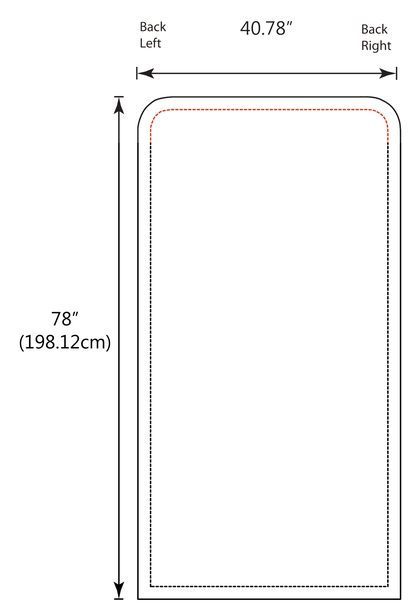
Back Left
40.78″
Back Right
78″ (198.12cm)

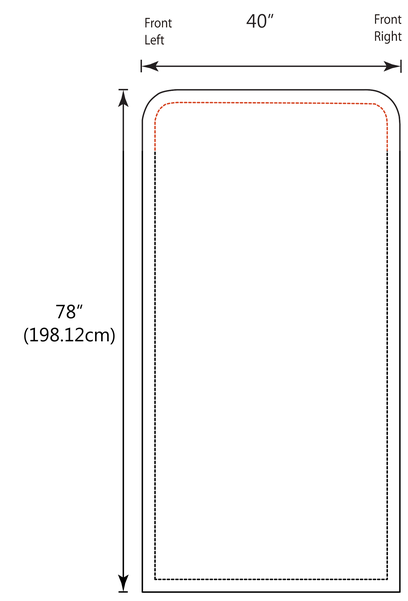
Front Left
40″
Front Right
78″ (198.12cm)

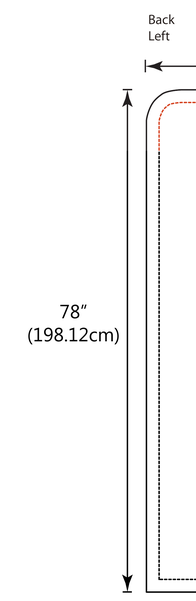
Back Left
78″ (198.12cm)

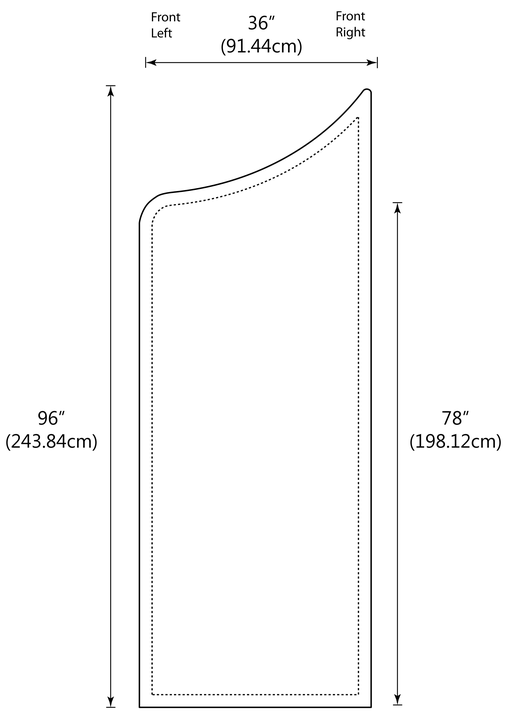
Front Left
36″ (91.44cm)
Front Right
96″ (243.84cm)
78″ (198.12cm)

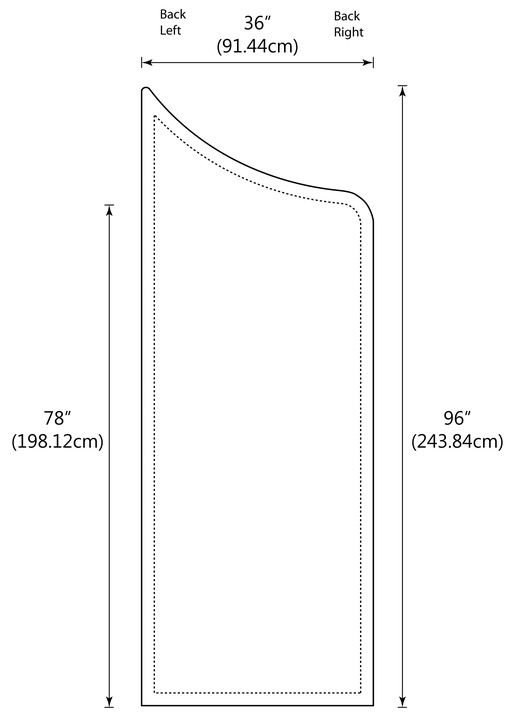
Back Left
36″ (91.44cm)
Back Right
78″ (198.12cm)
96″ (243.84cm)

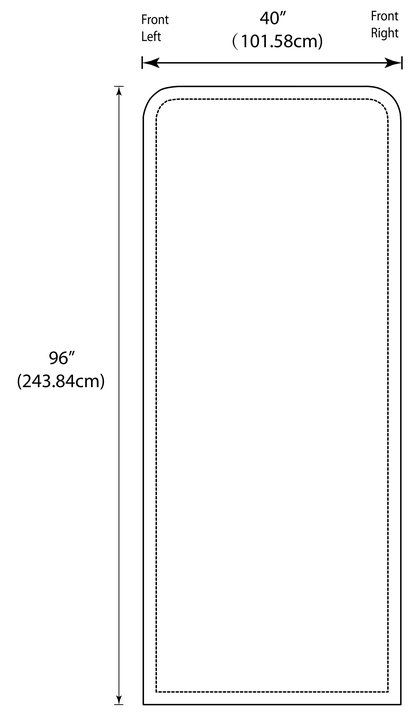
Front Left
40″ (101.58cm)
Front Right
96″ (243.84cm)

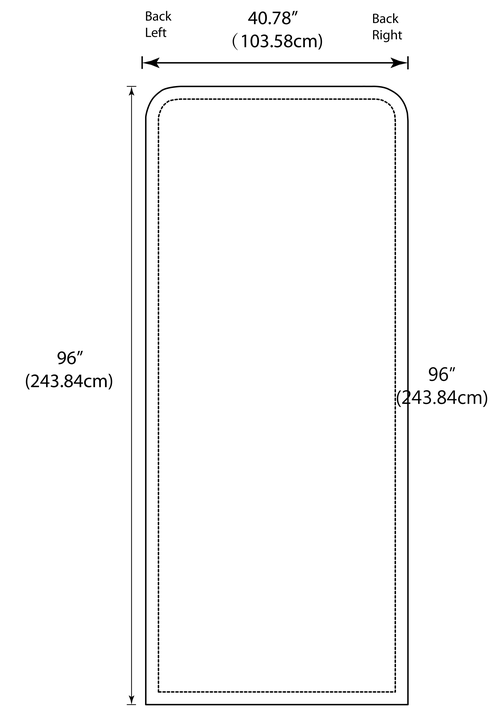
Back Left
40.78″ (103.58cm)
Back Right
96″ (243.84cm)

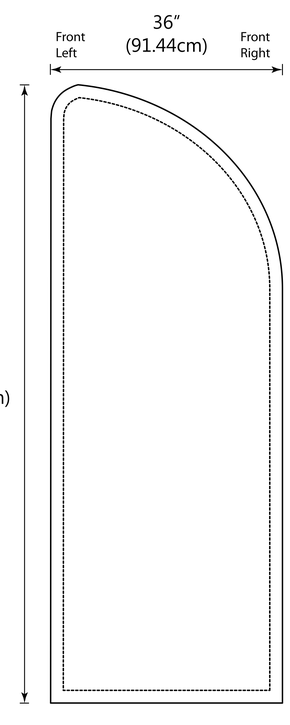
Front Left
36″ (91.44cm)
Front Right
96″ (243.84cm)

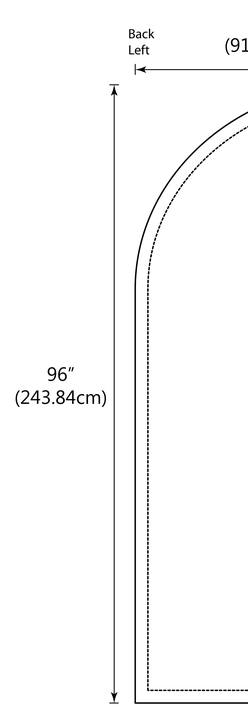
Back Left
96″ (243.84cm)