1:2

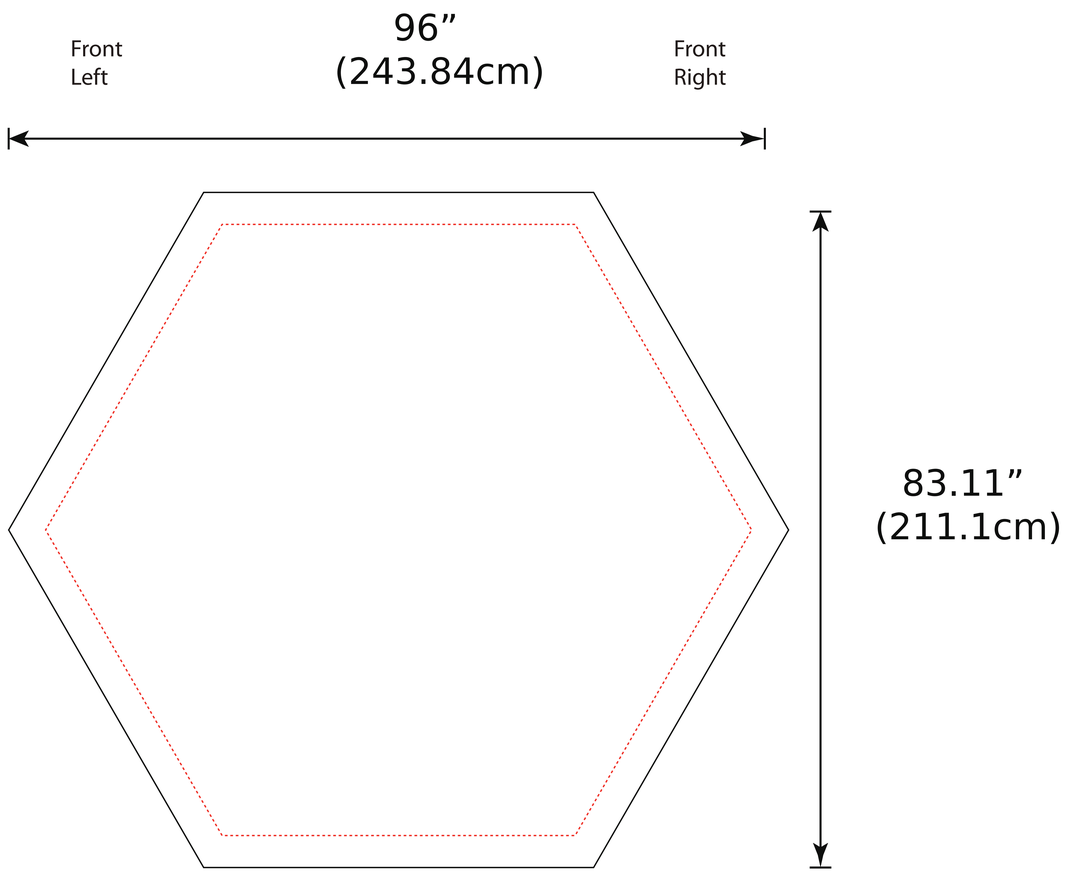
Front
Left
96”
(243.84cm)
Front
Right
83.11”
(211.1cm)

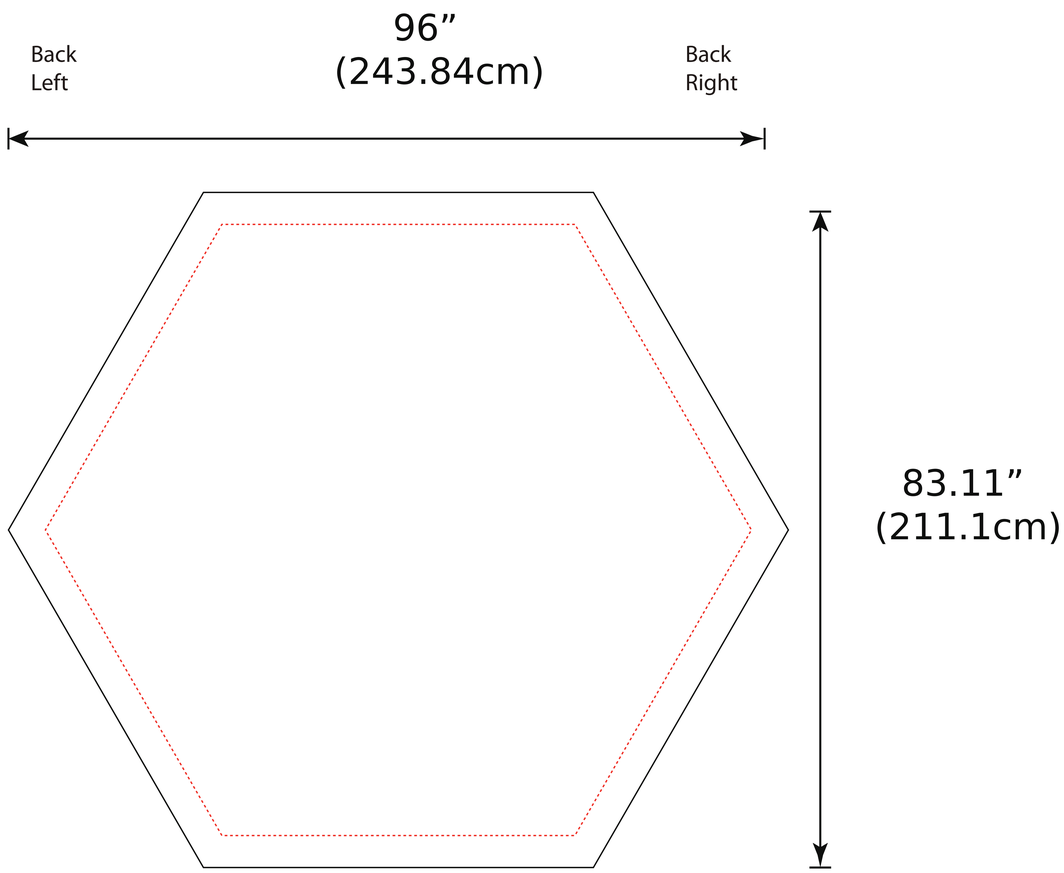
Back
Left
96”
(243.84cm)
Back
Right
83.11”
(211.1cm)