1:2

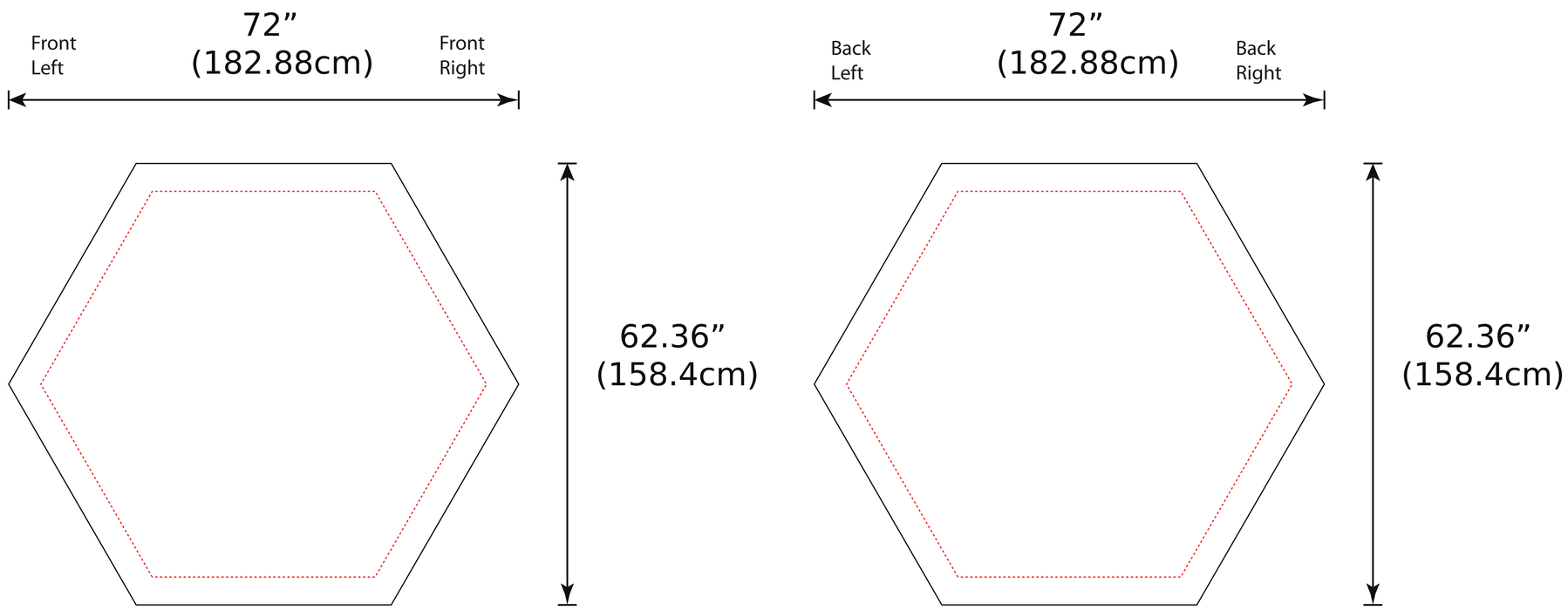
Front
Left
72”
(182.88cm)
Front
Right
62.36”
(158.4cm)
Back
Left
72”
(182.88cm)
Back
Right
62.36”
(158.4cm)