2438.4*2438.4mm

1:2

Front

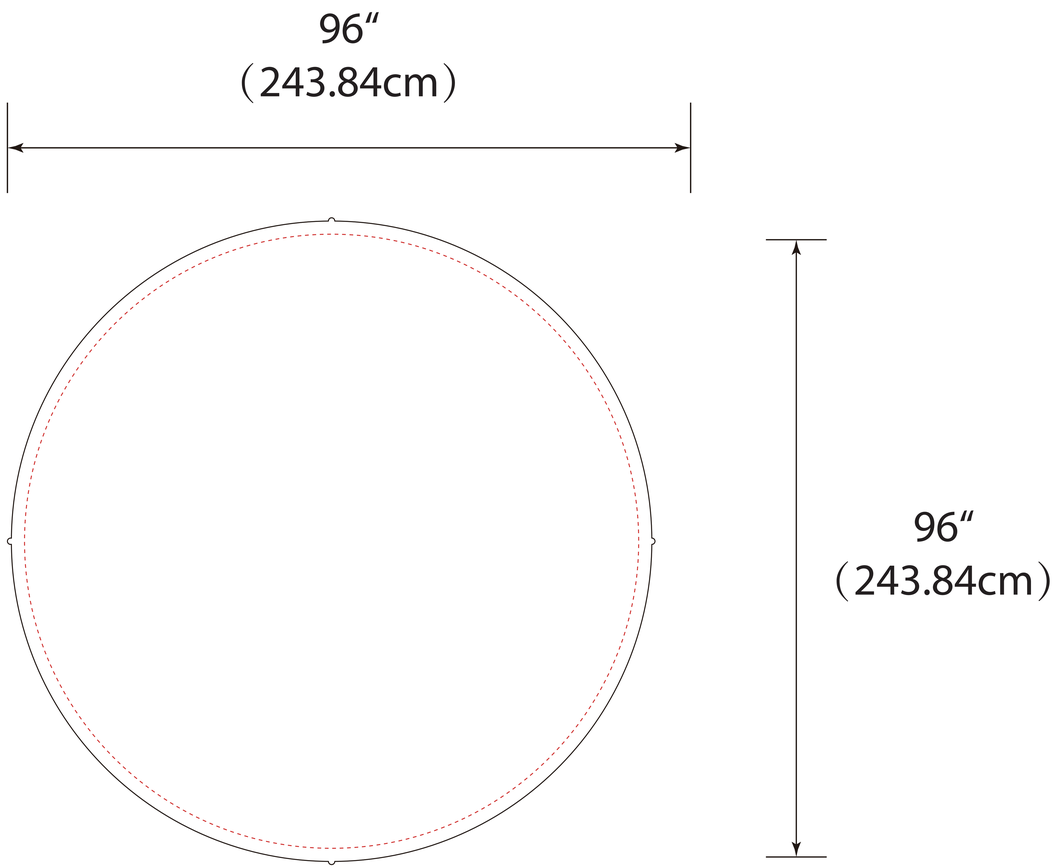
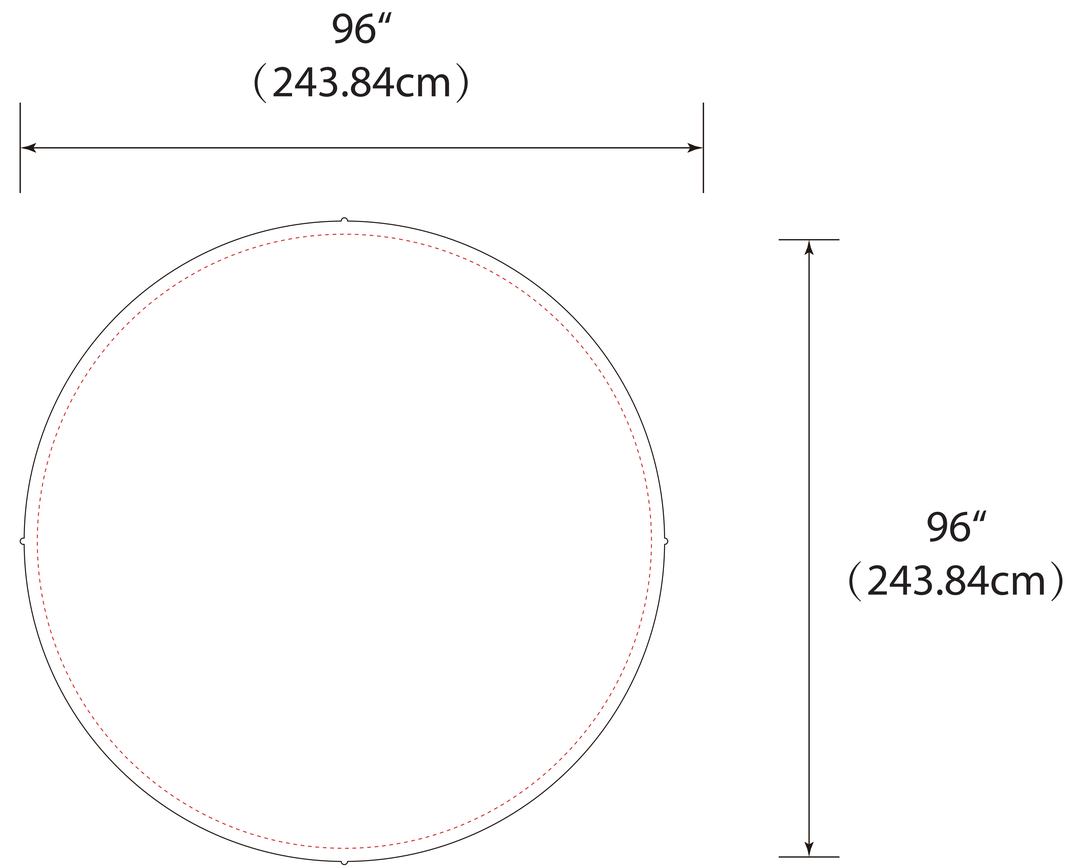
Back